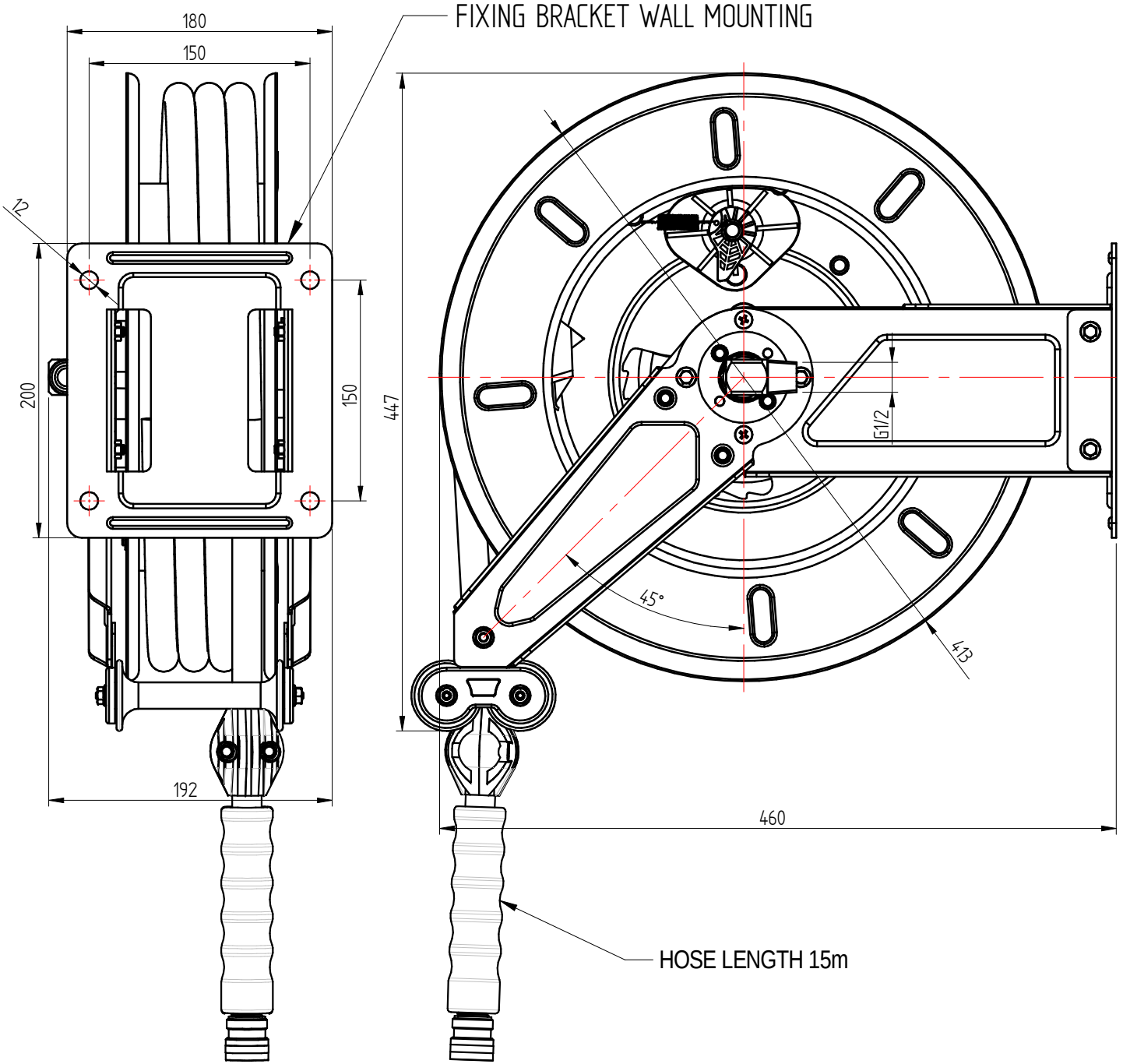
FIXING BRACKET WALL MOUNTING
180
150
12
200
150
192
447
G1/2
45°
413
460
HOSE LENGTH 15m